Prism

$SA = (\text{Perimeter of Base} \cdot \text{height}) + 2(\text{Area of base})$

$= Ph + 2B$

$V = \text{Area of Base} \cdot \text{height}$

$= B \cdot h$

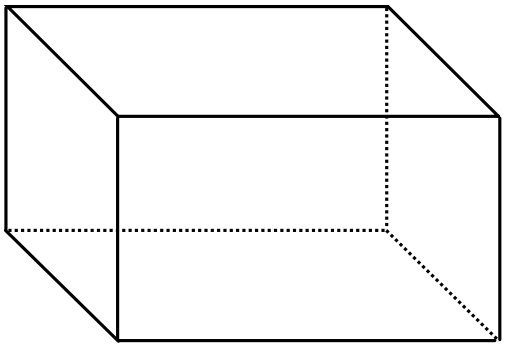

Cylinder

$SA = (\text{Circumference} \cdot \text{height}) + 2(\text{Area of Base})$

$= Ch + 2B = 2\pi rh + 2\pi r^2$

$V = \text{Area of base} \cdot \text{height}$

$= Bh$

$= \pi r^2 \cdot h$

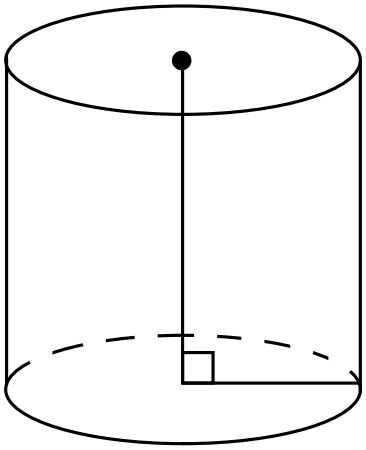

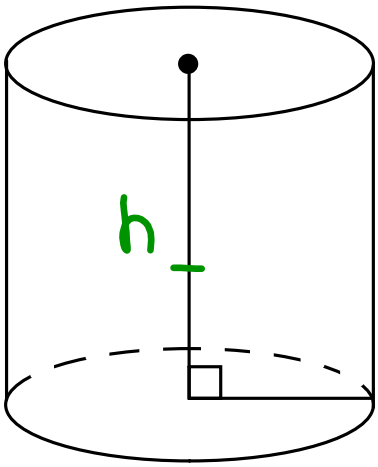

Right

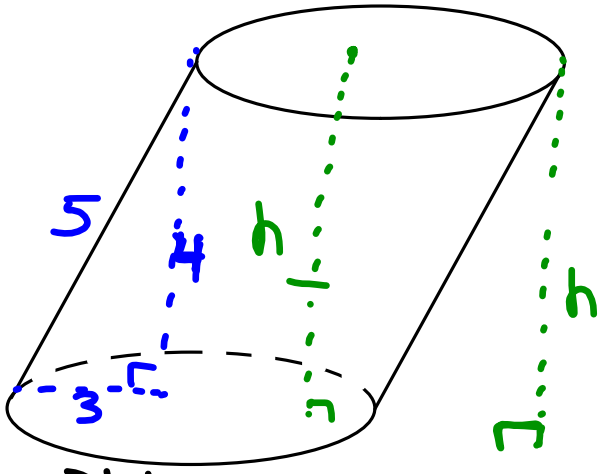

Oblique

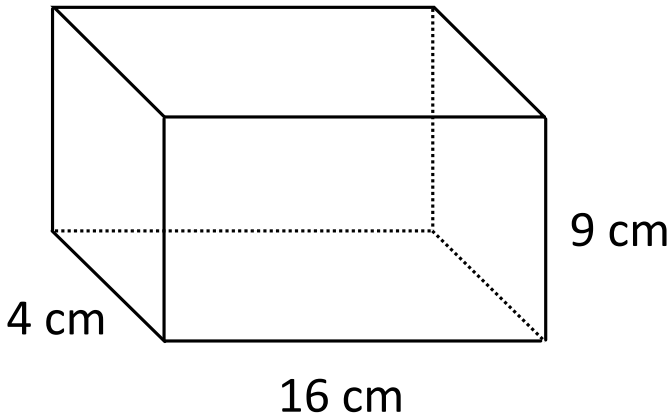

Base: rectangle

$SA = Ph + 2B$

$= (4+16+4+16)\cdot 9 + 2(4\cdot 16)$

$= 40\cdot 9 + 2(64)$

$= 360 + 128$

$\boxed{= 488\ cm^2}$

$V = B\cdot h$

$= (4\cdot 16)\cdot 9$

$= 64\cdot 9$

$= \boxed{576\ cm^3}$

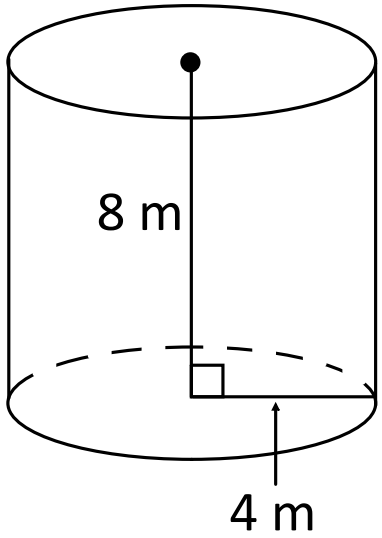

$SA = C \cdot h + 2B$

$= 2\pi 4 \cdot 8 + 2(\pi 4^2)$

$= 64\pi + 32\pi$

$\boxed{= 96\pi \ m^2}$

$V = B \cdot h$

$= \pi 4^2 \cdot 8$

$= \boxed{128\pi \ m^3}$

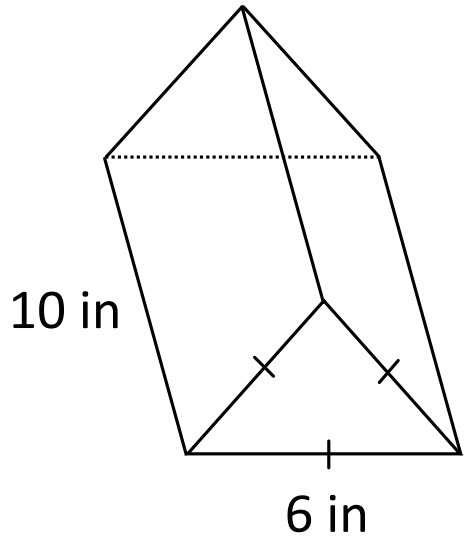

Base: equilateral Δ's

$B = \frac{1}{4} s^2 \sqrt{3}$

$= \frac{1}{4} 6^2 \sqrt{3}$

$= 9\sqrt{3}$

$SA = P \cdot h + 2B$

$= (6+6+6) \cdot 10 + 2(9\sqrt{3})$

$= 18 \cdot 10 + 18\sqrt{3}$

$\boxed{= 180 + 18\sqrt{3} \ in^2}$

$V = B \cdot h$

$= 9\sqrt{3} \cdot 10$

$\boxed{= 90\sqrt{3} \ in^3}$

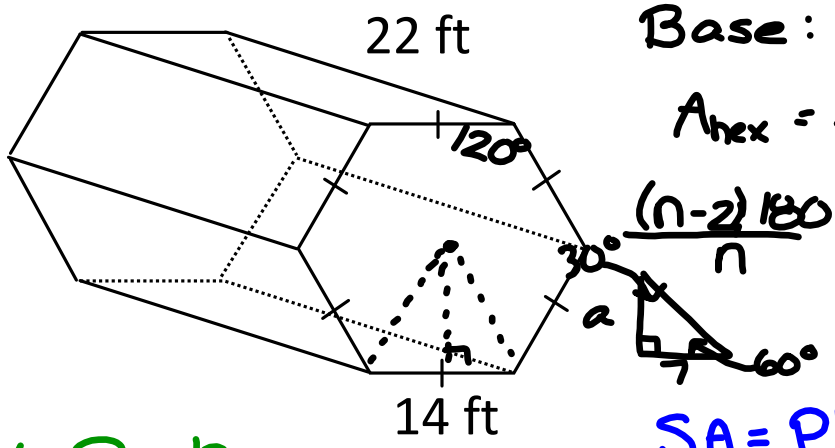

Base: Hexagon

$A_{hex} = \frac{1}{2} a P = \frac{1}{2}(7\sqrt{3})(6 \cdot 14) = 294\sqrt{3}$

$\frac{(n-2)180}{n} = \frac{4 \cdot 180}{6} = 120°$

$a = 7\sqrt{3}$

$V = B \cdot h$
$= 294\sqrt{3} \cdot 22$
$= 6468\sqrt{3}\ ft^3$

$SA = Ph + 2B$
$= (14 \cdot 6) \cdot 22 + 2(294\sqrt{3})$
$= 1848 + 588\sqrt{3}\ ft^2$

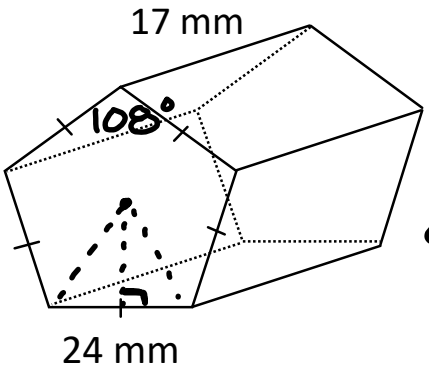

Base: Pentagon

$\frac{(n-2)180}{n} = \frac{3 \cdot 180}{5} = 108°$

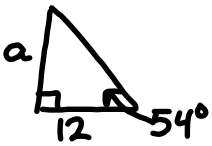

$\tan 54° = \frac{a}{12}$

$a = 12 \cdot \tan 54°$

$SA = P \cdot h + 2B$
$= (24 \cdot 5) \cdot 17 + 2(720 \tan 54°)$
$= 2040 + 1440 \tan 54°$
$\approx 4021.990\ mm^2$

$B = \frac{1}{2}(12 \cdot \tan 54°) \cdot (5 \cdot 24)$
$= 720 \tan 54°$

$V = B \cdot h$
$= 720 \tan 54° \cdot 17$
$= 12{,}240 \tan 54°$
$\approx 16{,}846.915\ mm^3$